ELECTRIC POWER RESEARCH INSTITUTE

Neutral-Grounding for Inverter-Connected DER

Project Update

Tom Key, EPRI, tkey@epri.com
Devin Van Zandt, DVanZandt@epri.com

NYSERDA Research Project for ITWG Meeting
October 1, 2020

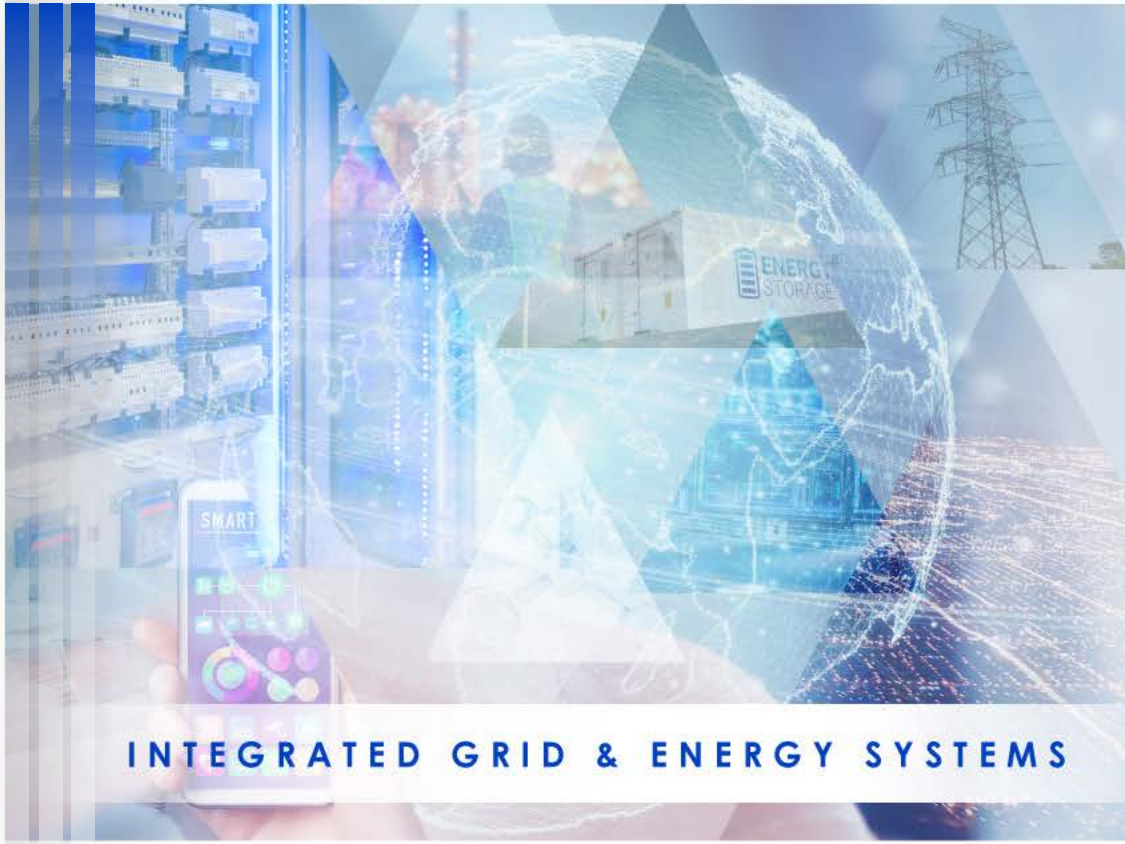

© 2020 Electric Power Research Institute, Inc. All rights reserved.

NYSERDA Effective Grounding Project

- TASK 1. Assess Current Utility Practice To Inform Objectives
  - Surveyed 20 utilities DER grounding practices to sharpen project objectives
  - Present at ITWG December 4, 2019
- TASK 2. Develop Relevant Scenarios and Application Modeling
  - Preliminary results at ITWG Feb 6, with an update today
  - Include Laboratory and HIL Tests and leading to specific analytics
- TASK 3. Coordinated and Concurrent Analysis, Simulation, and Testing – finish in Oct.
- TASK 4. Develop Guidelines for Inverter Effective Grounding, complete by Dec. 2020
- TASK 5. Tech Transfer Workshops
  - Completed three virtual workshops with utilities Sept 1-9
  - Planned workshop with NY developers, TBD, in October.

© 2020 Electric Power Research Institute, Inc. All rights reserved.

Attending from our 2019 Nyserda Survey of Utility Grounding Practices

NY Utilities

1. Avangrid (NYSEG, RGE)
2. Central Hudson
3. Consolidated Edison
4. National Grid (NY)
5. Orange and Rockland
6. PSEG Long Island

Utilities Outside NY

1. AEP
2. Aliant
3. Ameren
4. Centerpoint Energy
5. Dominion Virginia Power
6. Duke Energy
7. Xcel Energy
8. Entergy
9. Exelon (Com Ed, Chicago)
10. Exelon (PECO, Philadelphia))
11. Exelon (PHI, DC, MD, NJ)
12. Eversource
13. Hydro One (Ontario, CA)
14. National Grid (MA)
15. Pacific Gas & Electric

© 2020 Electric Power Research Institute, Inc. All rights reserved.

NYSERDA Effective Grounding Workshop

- Three Two-Hour Sessions:
  - PART 1: Background History and Technical Context (Sept 2nd)
    (classical system grounding, COG, OV issues, customer and equipment protection objectives, transformer roles, traditional practices)
  - PART 2: Simulations, Testing and Tools (Sept 9th)
    (review part 1, look at EMTP simulation results, knowledge and uncertainties, LRO/GFO assessment tool, use of screening)
  - PART 3: Utility Practices Evaluation and Evolution (Sept 11th)
    (review part 2, share and compare utility practices, screening, discuss specific cases, application-specific requirements)
- Significant technical detail/discussion, Q/A, chat and polling.
- Average attendance was 55

© 2020 Electric Power Research Institute, Inc. All rights reserved.

Neutral Grounding Guidelines of IEEE C62.92 Series:

Classical Effective grounding Practices

- C62.92.1 – Introduction and definitions
- C62.92.2 – Synchronous generator systems
- C62.92.3 – Generator auxiliary systems
- C62.92.4 – Distribution systems
- C62.92.5 – Transmission and sub-transmission systems
- C62.92.6 – Systems supplied by current-regulated sources

New guideline is meant for the special characteristics of Inverter Sources

© 2020 Electric Power Research Institute, Inc. All rights reserved.

The following is sampling of Workshop Materials

Voltage Swell (TOV) Caused By Neutral Shift During Fault

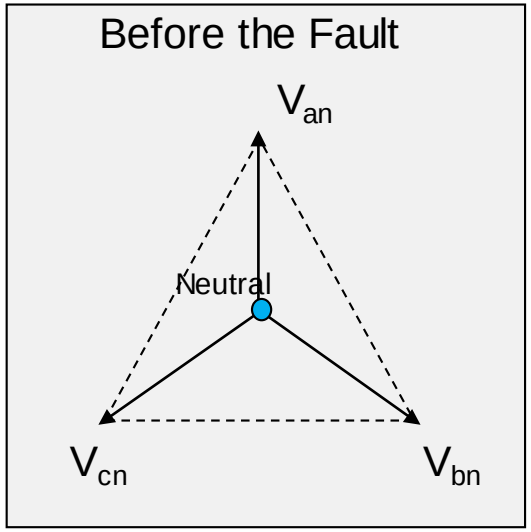

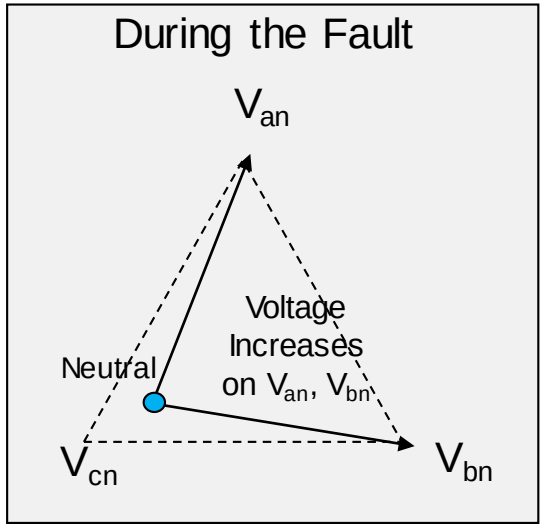

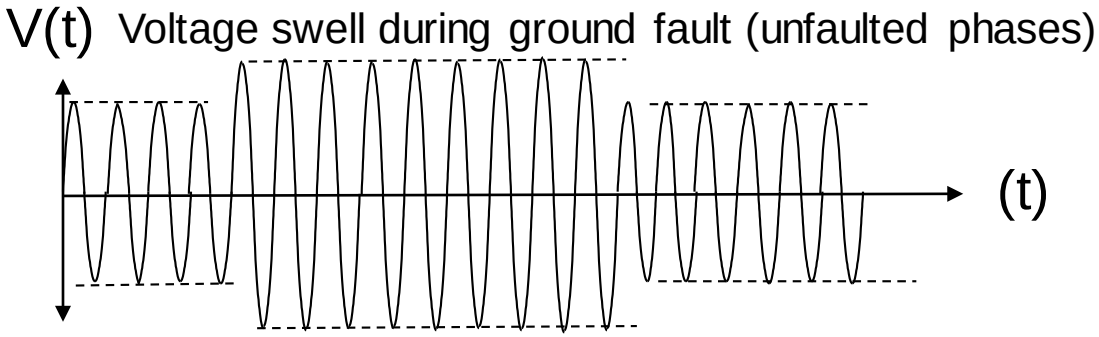

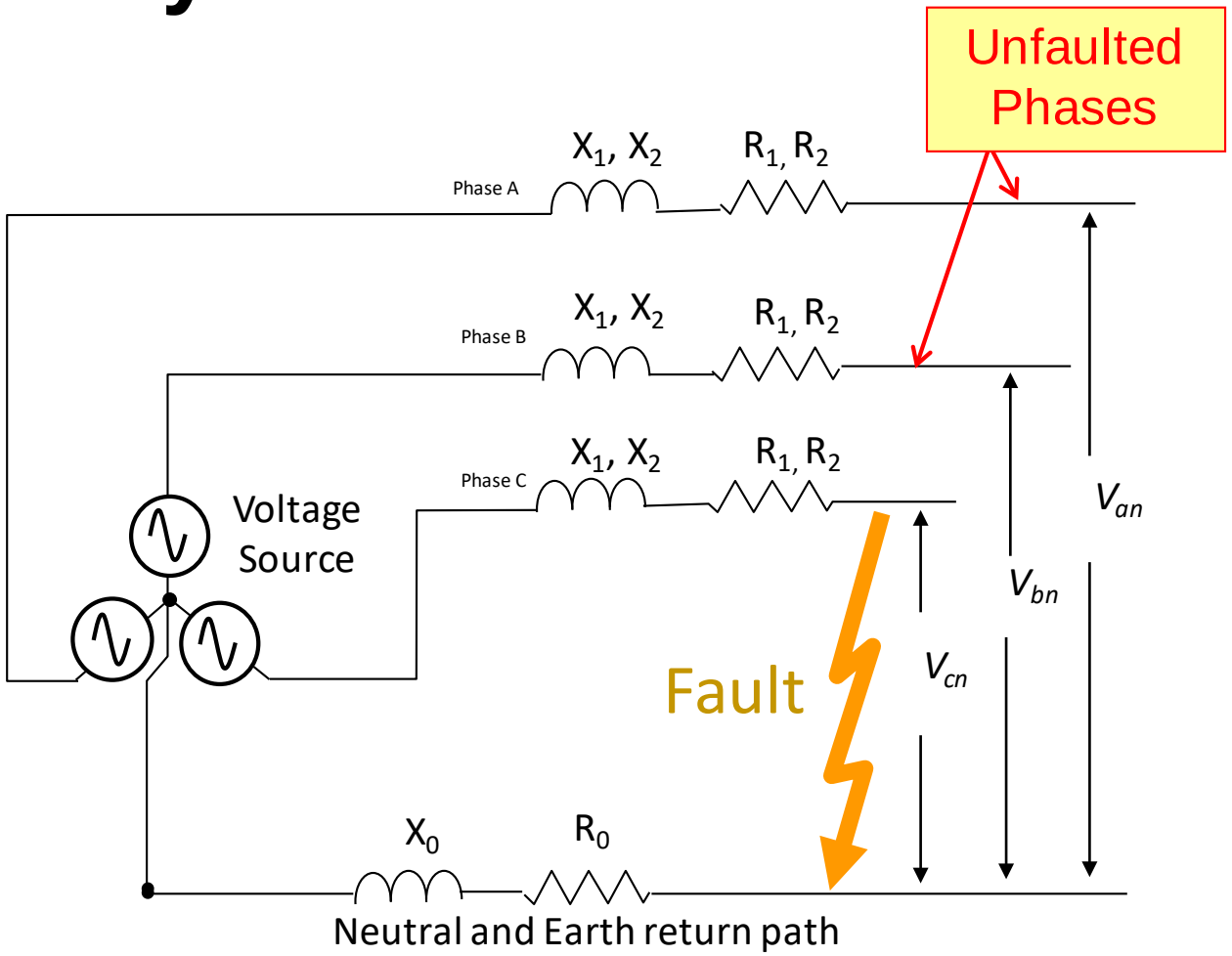

© 2020 Electric Power Research Institute, Inc. All rights reserved.

Ground Fault Overvoltage Island Zones

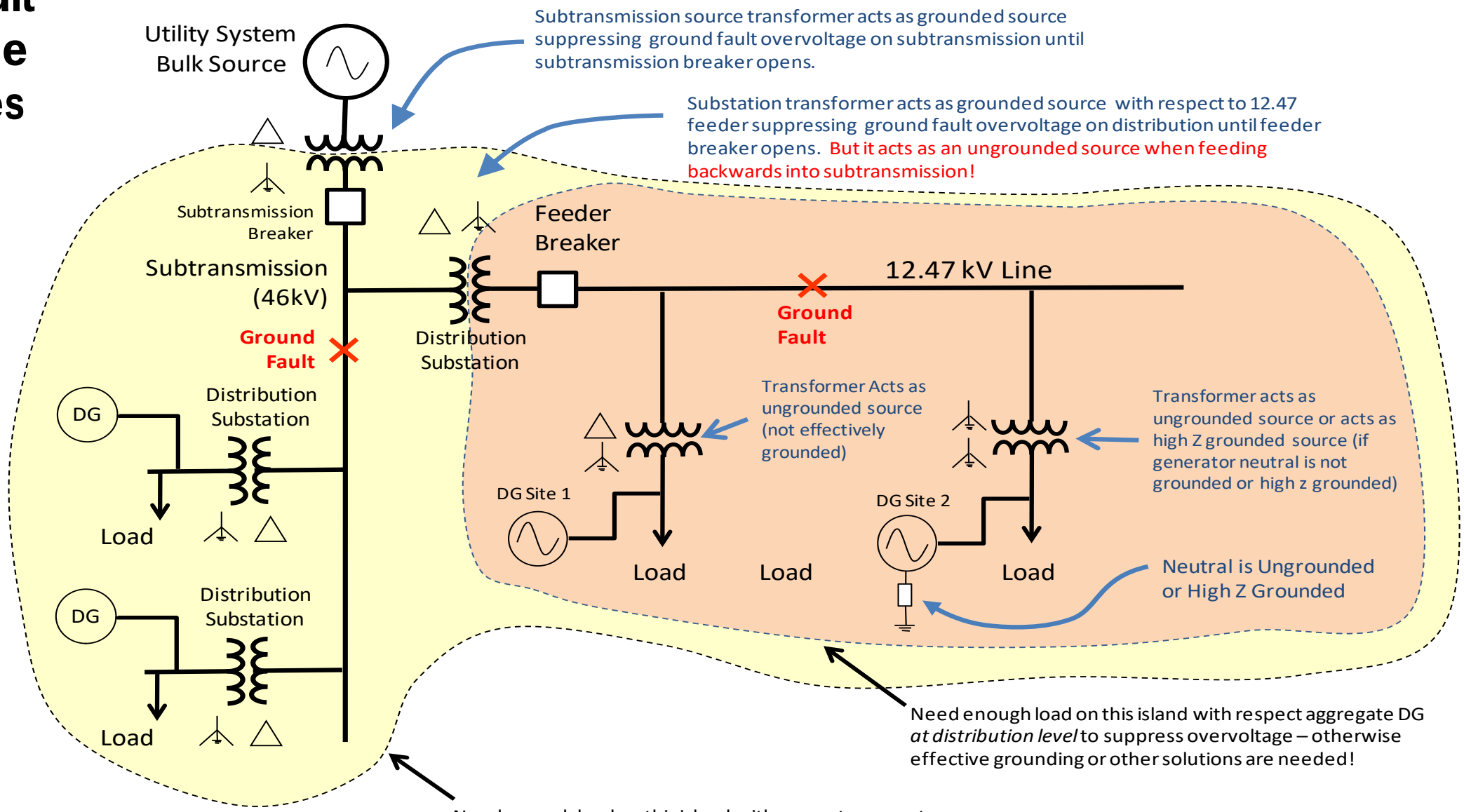

© 2020 Electric Power Research Institute, Inc. All rights reserved.

Chart Showing COG Overvoltage Levels

- The chart shows "isolines" of overvoltage level for various R_0/X_1 and X_0/X_1 ratios. This chart is valid for X_1/R_1 ratio of 2
- IEEE C62.92.1-2000 defines a COG of 80% or less as effectively grounded. As a rule, the area shaded in orange where $X_0/X_1 \leq 3$ and $R_0/X_1 < 1$ is considered being *effectively grounded for typical power systems and machine characteristics.*
- Good 4-wire feeder design practice for power quality reasons limits COG to about 72% or less (within red dashed line). This requires a more stringent $X_0/X_1 \leq 2$ and $R_0/X_1 \leq 0.7$ as shown by the dashed red lines (see IEEE C62.92 series for a complete explanation).

Graph Adapted from C62.92.1-2000

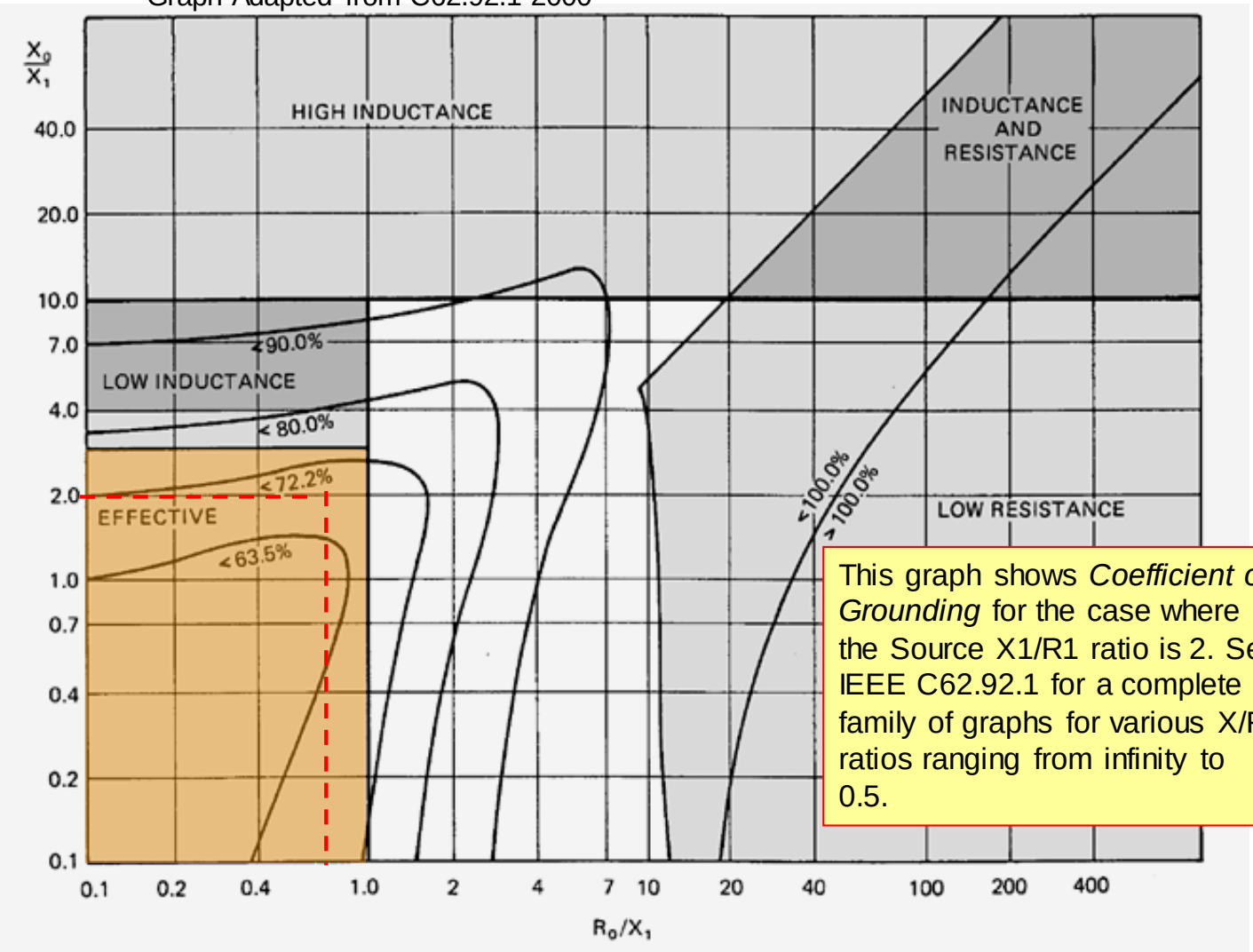

This graph shows *Coefficient of Grounding* for the case where the Source X1/R1 ratio is 2. See IEEE C62.92.1 for a complete family of graphs for various X/R ratios ranging from infinity to 0.5.

© 2020 Electric Power Research Institute, Inc. All rights reserved.

Example of Load Suppression of Ground Fault Overvoltage and LRO by Massive Overloading

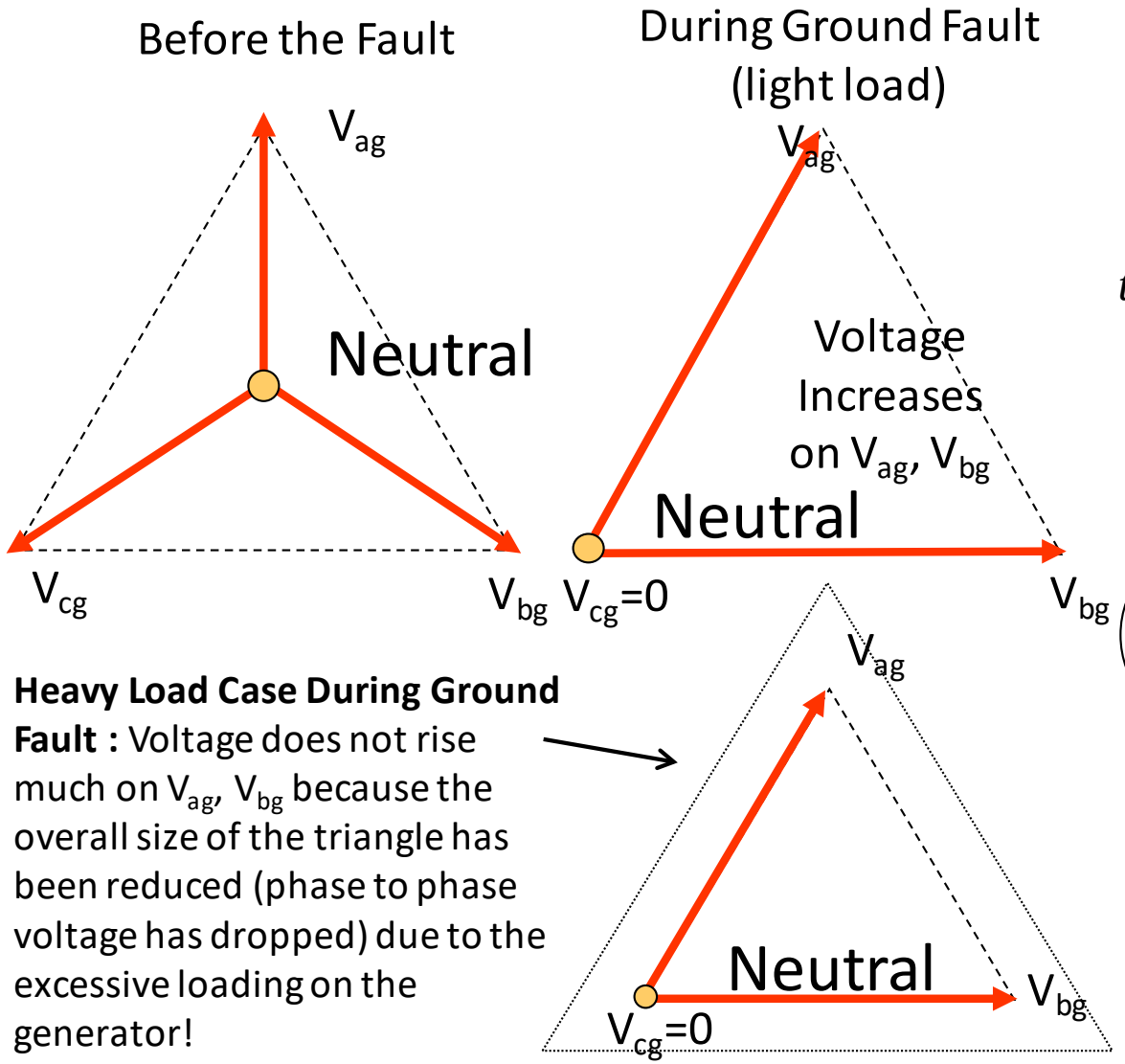

Heavy Load Case During Ground Fault : Voltage does not rise much on V_{ag}, V_{bg} because the overall size of the triangle has been reduced (phase to phase voltage has dropped) due to the excessive loading on the generator!

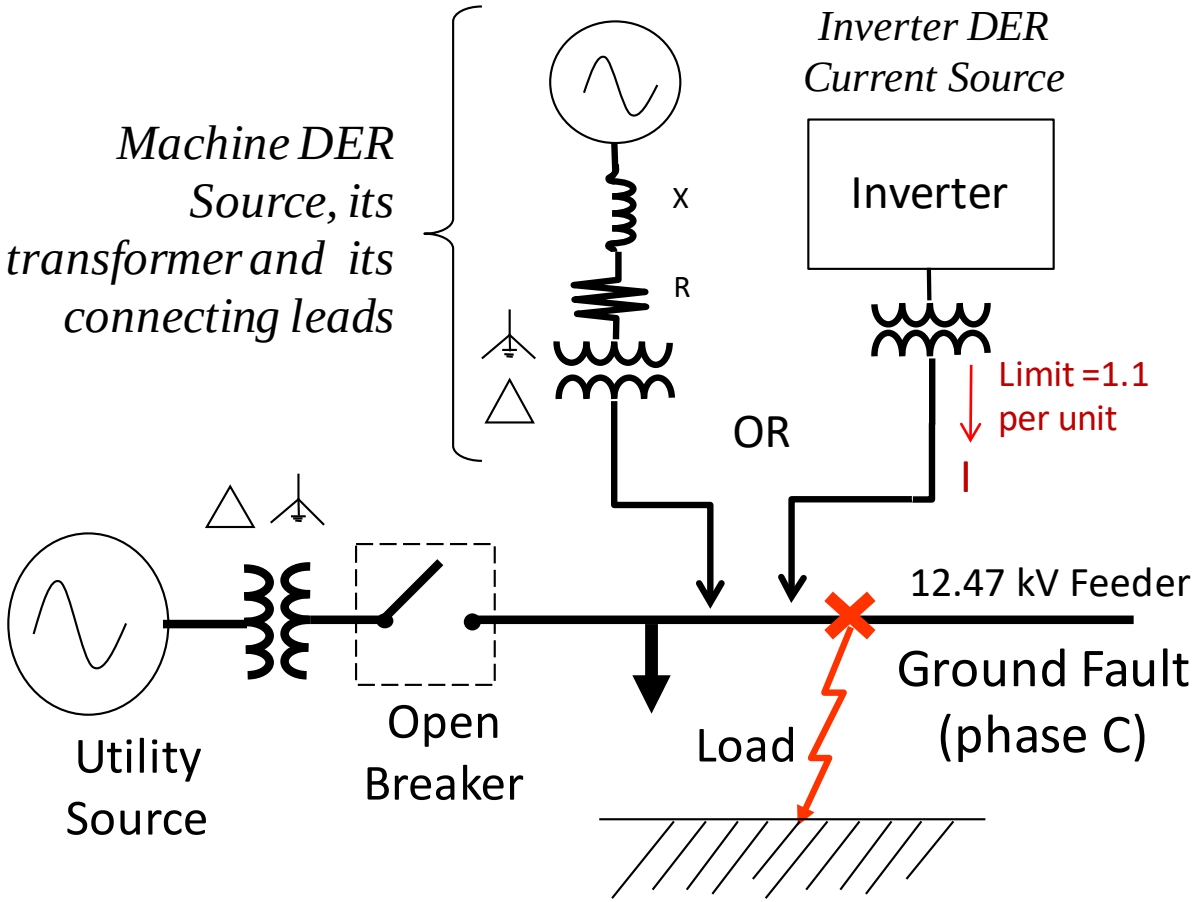

- **Voltage source:** load is large enough to drop voltage via impedance drop
- **Current source:** load is large enough to significantly exceed current source limit, causing voltage collapse

© 2020 Electric Power Research Institute, Inc. All rights reserved.

More Common Transformerless Three-Phase PV Inverter

(Internal Neutral Connection Shown)

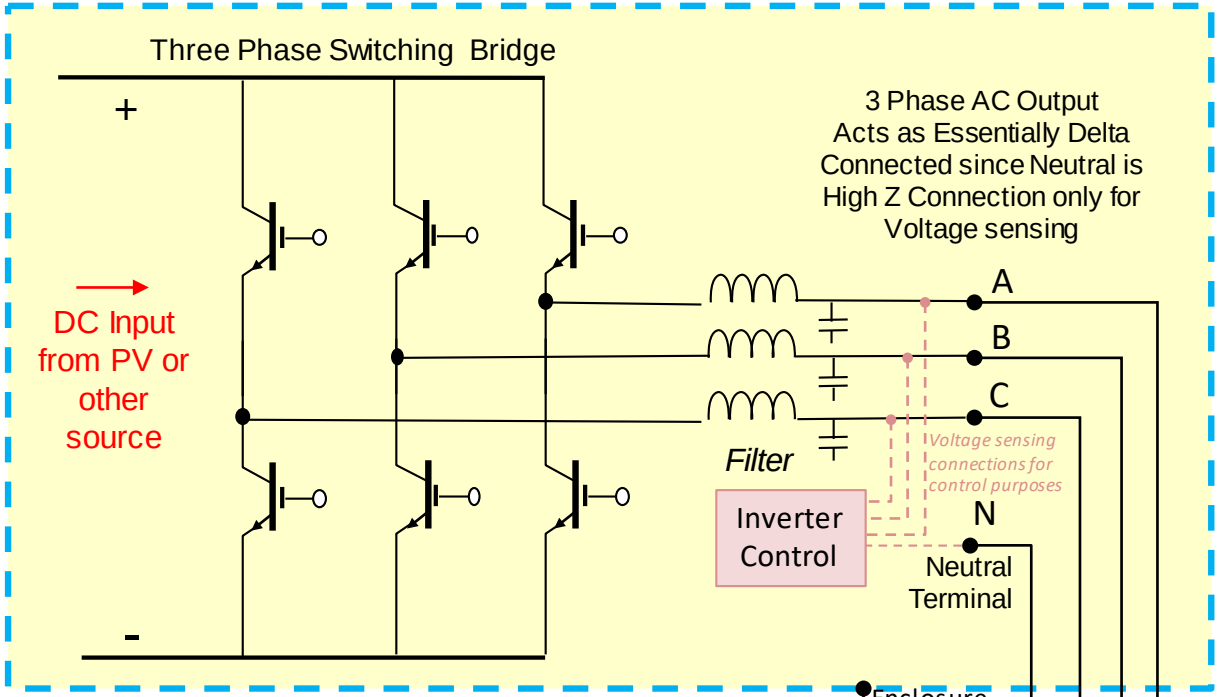

Note: this drawing shows only one inverter for clarity, but many inverters may be present and tied into the collection grid.

Note: In this arrangement the neutral connection is brought to the inverter but is used only as a voltage sensing reference for control purposes. It is not intended as a zero sequence power carrying connection. Internally it is connected to the control circuitry via high impedance and will appear as a very high Z or open connection.

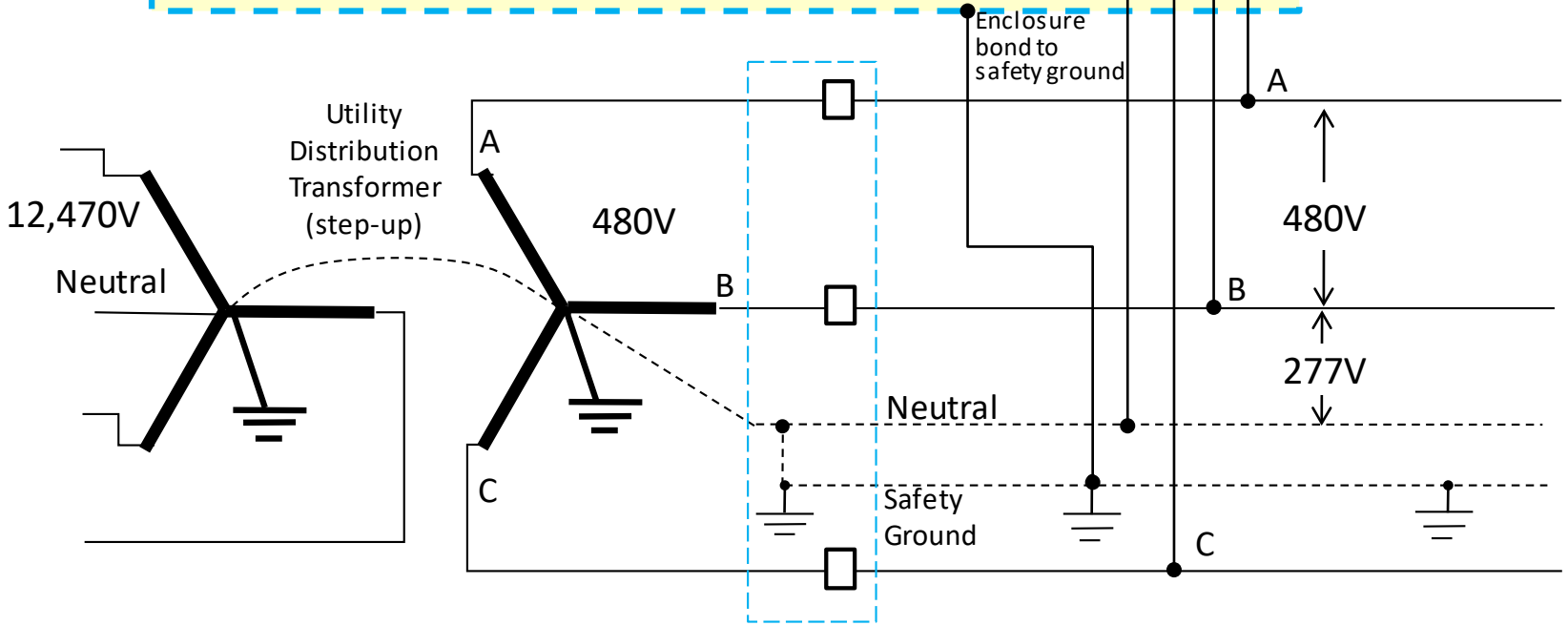

© 2020 Electric Power Research Institute, Inc. All rights reserved.

Some Transformer Generator Combinations

(Current Source Inverter Situations)

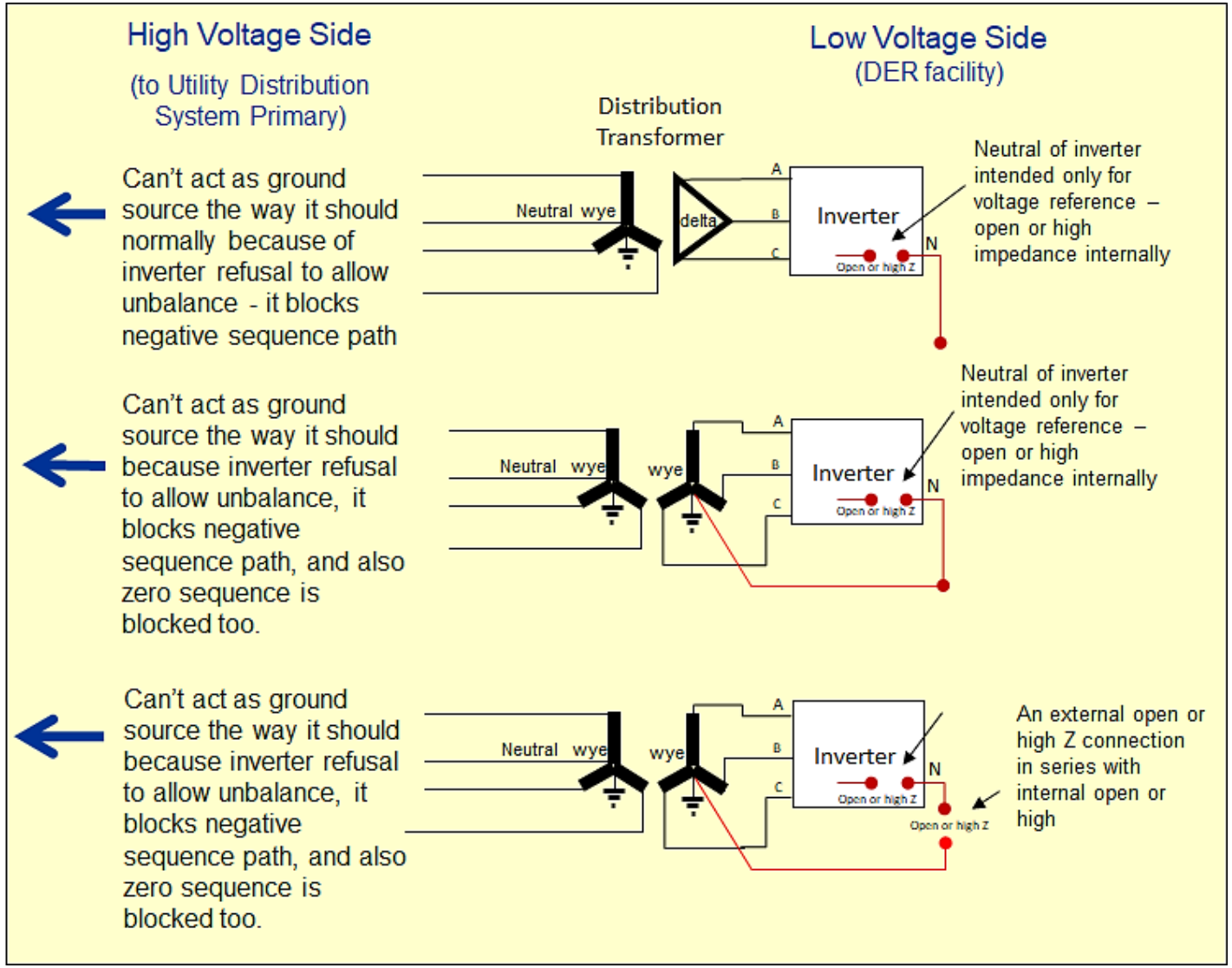

Symmetrical Component Explanation

(For Delta Low side to grounded-wye high side case)

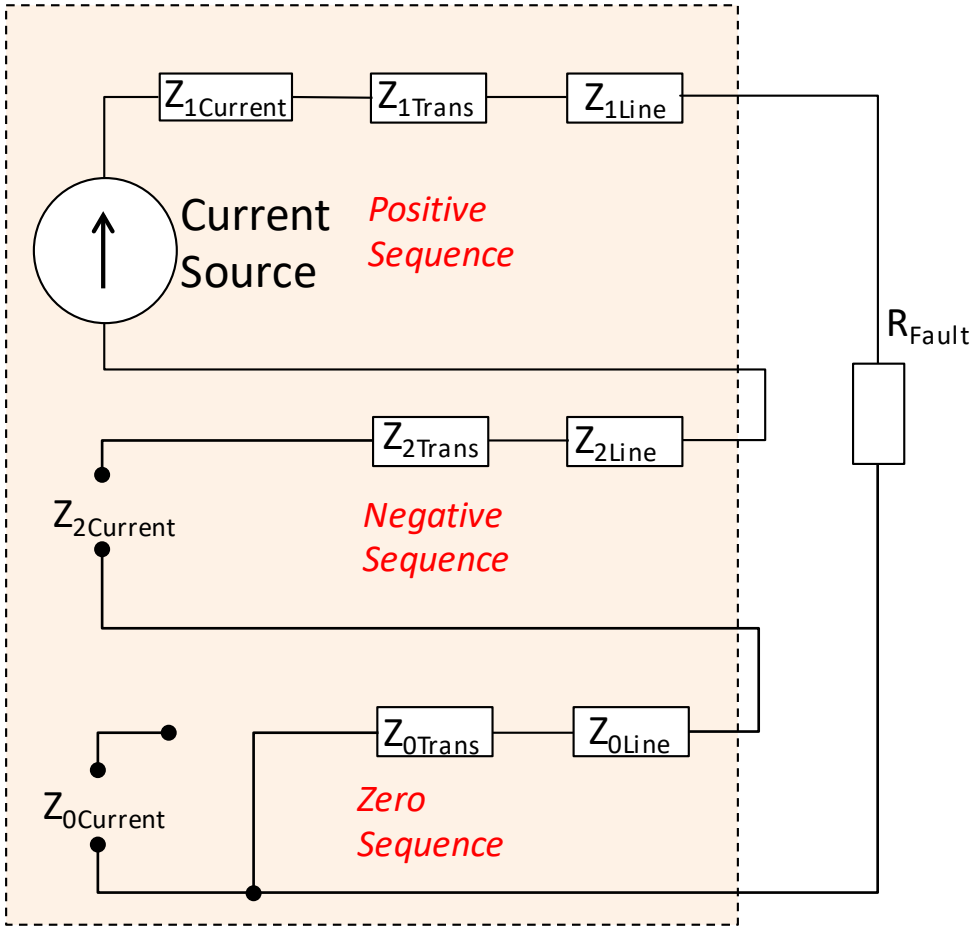

© 2020 Electric Power Research Institute, Inc. All rights reserved.

Symmetrical Component Model:

Single Line to Ground Fault, loads included, inverter with saturable current source, Delta low side to grounded-wye high side transformer and extremely high or infinite inverter Z_2

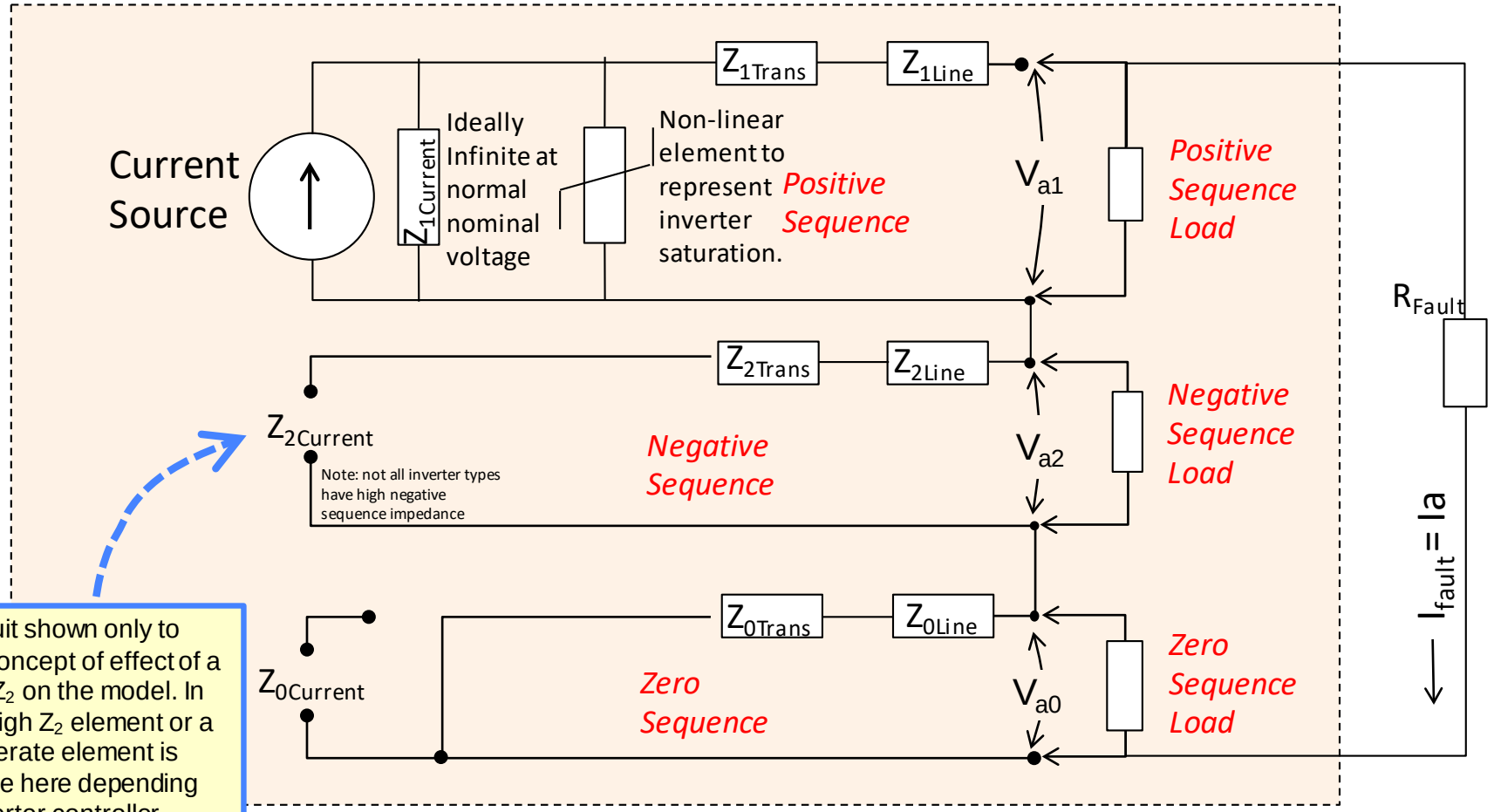

Open circuit shown only to illustrate concept of effect of a very high Z_2 on the model. In reality, a high Z_2 element or a more moderate element is appropriate here depending on the inverter controller design.

Faulted Phase A:

$I_a = I_{a1}+I_{a2}+I_{a0}$

$V_a = V_{a1} + V_{a2} + V_{a0} + R_f I_a$

$V_a = 0$ when $R_{fault} = 0$

Unfaulted Phases B and C:

$I_b = I_c = 0$

$V_b = a^2V_{a1} + aV_{a2} + V_{a0}$

$V_c = aV_{a1} + a^2V_{a2} + V_{a0}$

Key Takeaways:

- A very large inverter negative sequence impedance can create severe unfaulted phase voltage despite the presence of a low impedance zero sequence path
- The loads themselves must be included to analyze the neutral shift and resulting GFO that occurs

© 2020 Electric Power Research Institute, Inc. All rights reserved.

1. What are your most recent practices with regard to GFO prevention with inverter DER > 1MW?

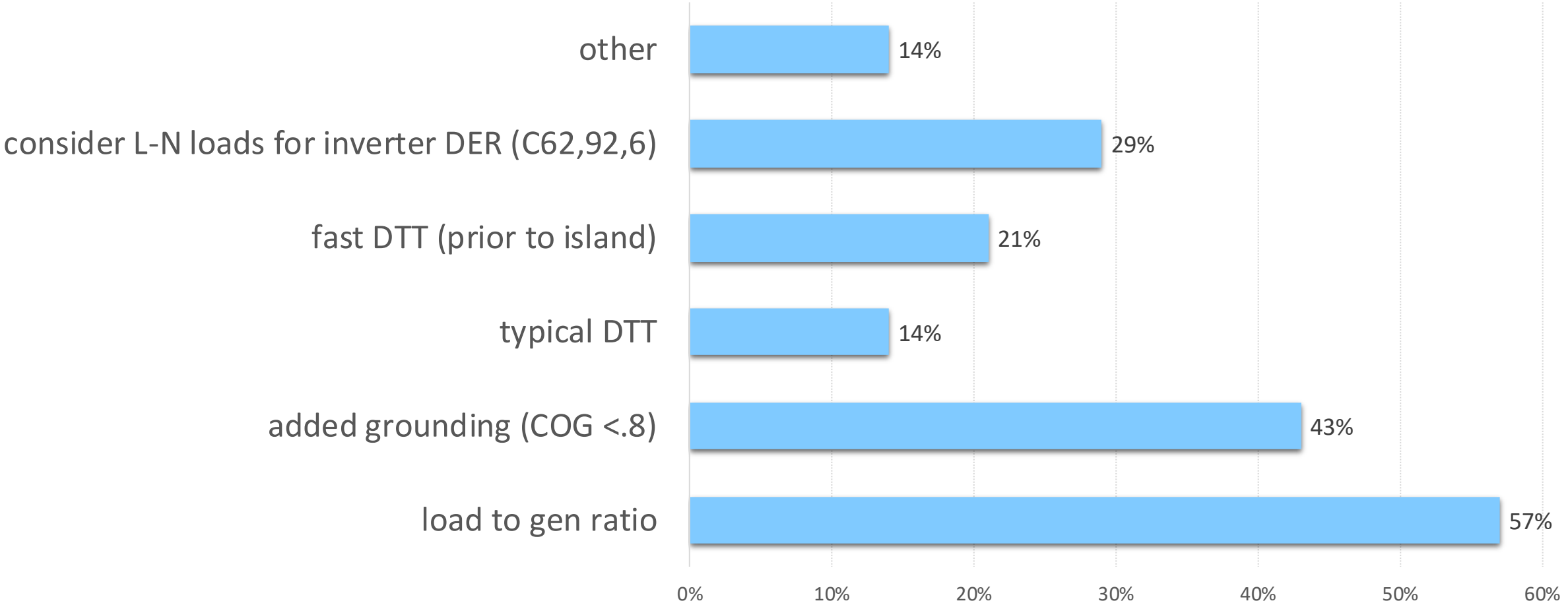

***multiple answer question**

© 2020 Electric Power Research Institute, Inc. All rights reserved.

5. If adding supplemental grounding, have you seen a need to re-coordinate protection?

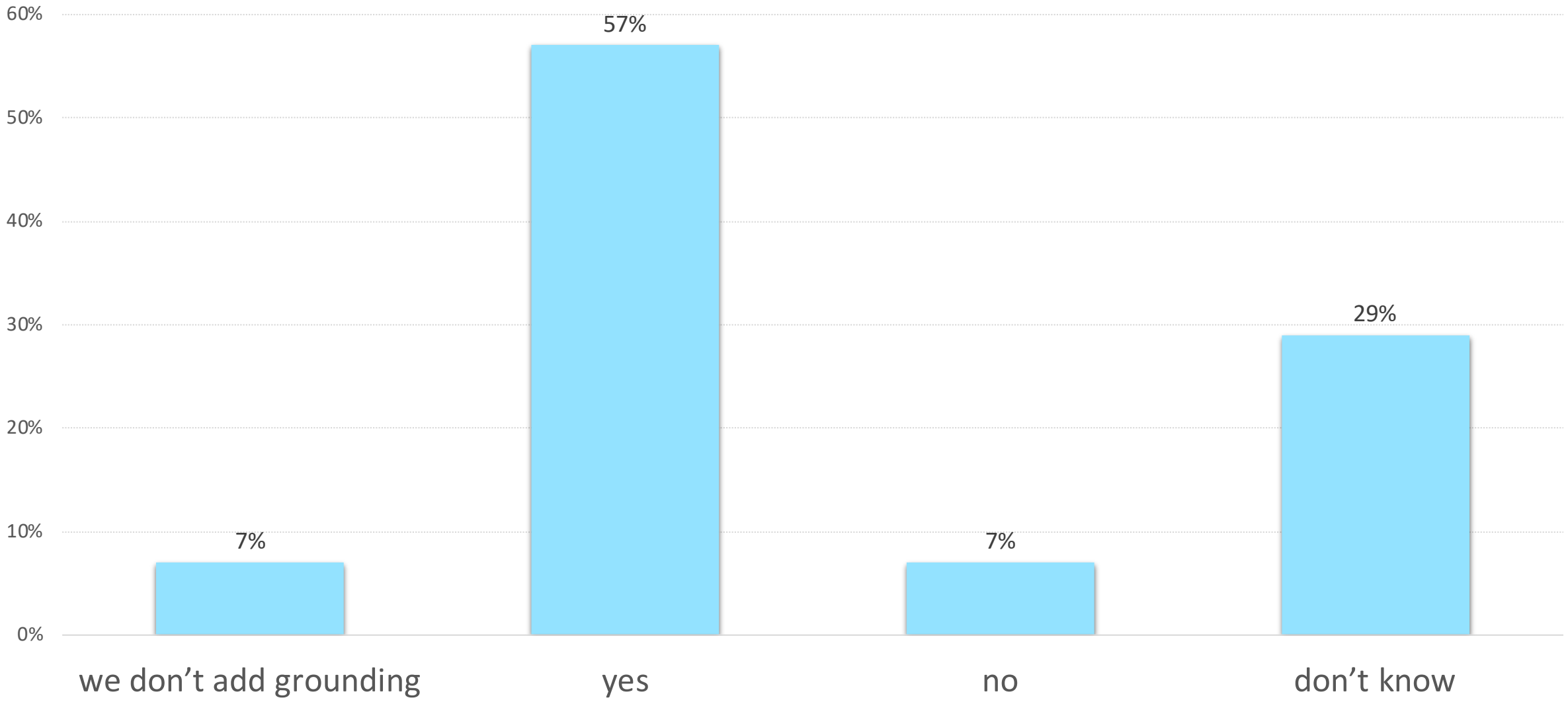

© 2020 Electric Power Research Institute, Inc. All rights reserved.

6. Do you expect your current approach to be sufficient in the longer term?

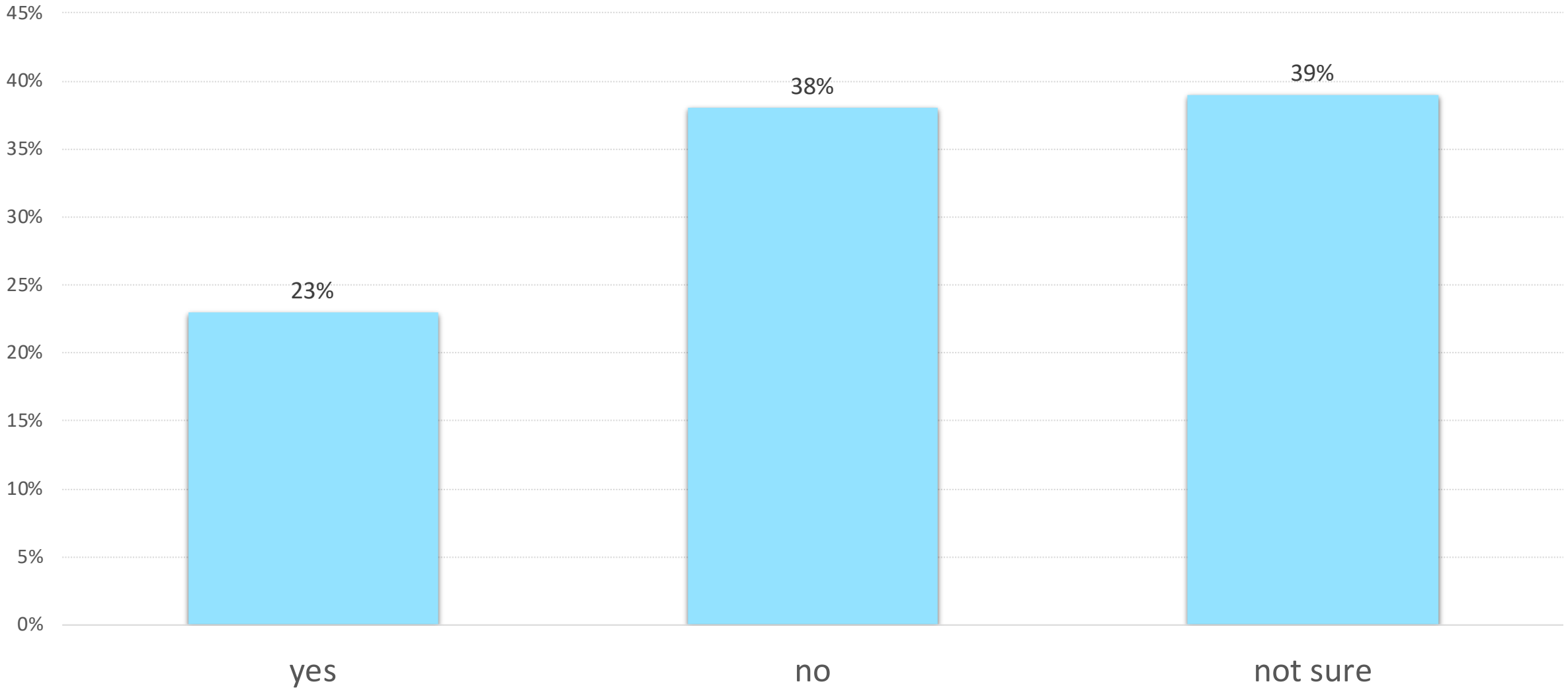

© 2020 Electric Power Research Institute, Inc. All rights reserved.

7. Has this discussion moved you to consider any changes?

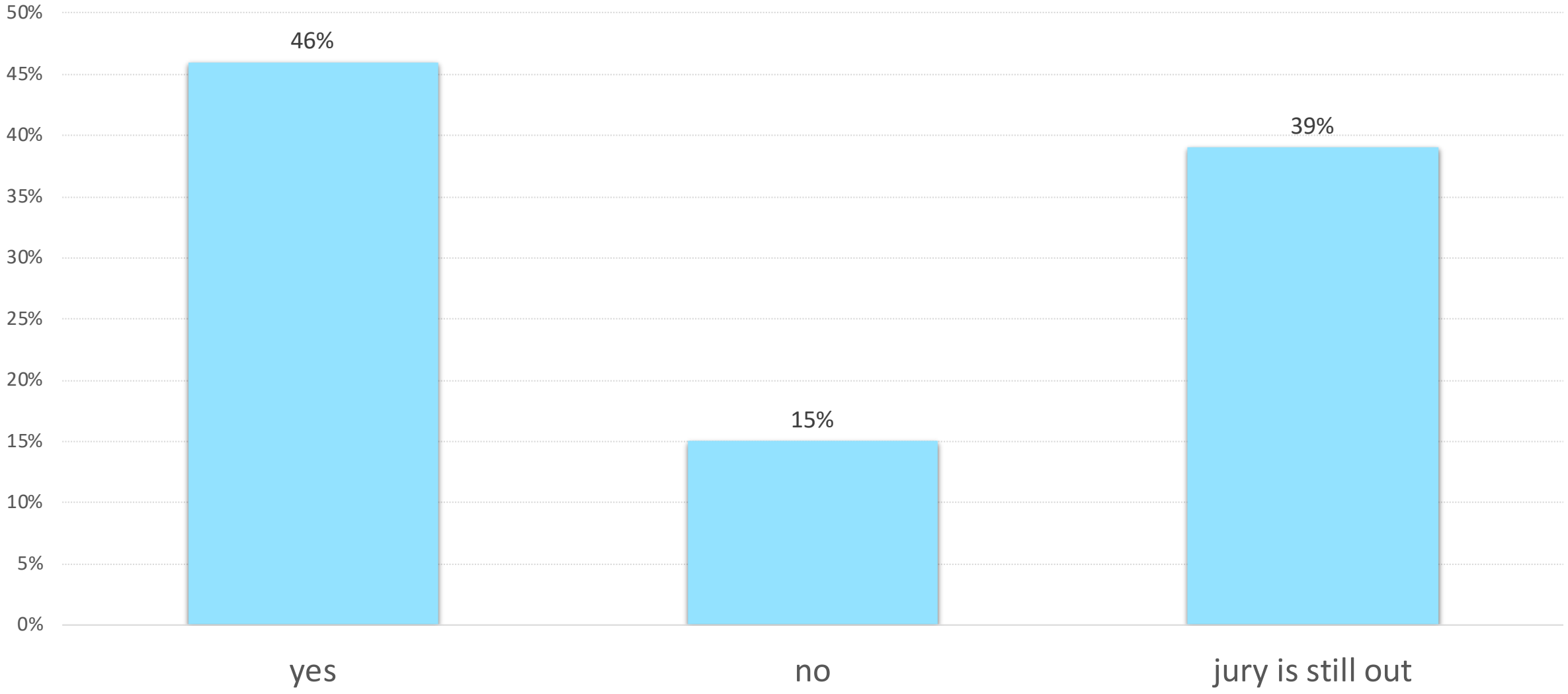

© 2020 Electric Power Research Institute, Inc. All rights reserved.

Tech Brief Plan (pubic) on Grounding

- **Overvoltage Issues of Inverter Interfaced DER (1.5 page)**
  - Introductory description of classical GFOV and evolving to include LROV
  - Discussion of differences between rotating machine and inverter OV conditions, C62.92-6
  - Affect of LRO and GFOV overvoltage on loads and utility equipment (surge arresters)
  - Differences in feeder/utility practices.
- **Good news/bad news regarding inverters (1/2 page)**
  - Inverters are easier than rotating machines….. getting better.
  - LRO has been a relatively strong behavior for inverters (different than machine) and has complicated interconnection worry.
- **Screening for Overvoltage Issues (1 ½ page)**
  - Applying field experience and analytics (modeling and simulation) to screening
  - heavier load screening methods (1.5 per unit factor)
  - lighter load based screening methods (33% l-n loads versus delta loads, with 1 pu total load to suppress LRO)
- **If screening fails…lassical and new mitigation solutions …developer/utility options (2 pages)**
  - What they are (supplemental grounding, fast DTT, IEE 1547-2018 7.4 limits curve)
  - when they work and when they don't work (pros and cons of each). Include negative impacts of grounding transformers (such as arc flash, desensitization, backfeed, etc.)
  - Mitigation selection chart
- **Overall consensus Recommendations to Industry (1/2 page)**
- **Looking Ahead (1/2 page)**

© 2020 Electric Power Research Institute, Inc. All rights reserved.