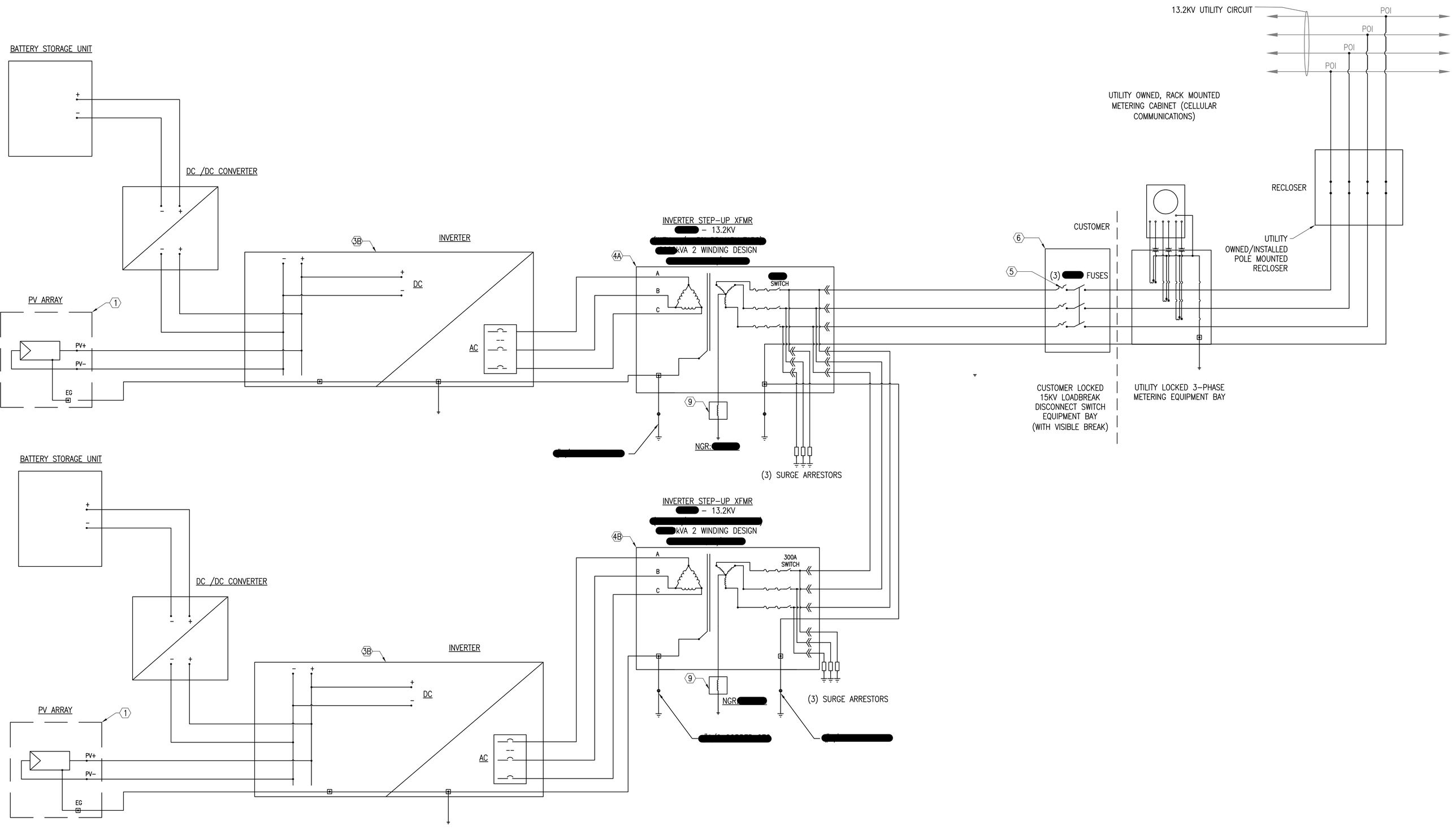
13.2KV UTILITY CIRCUIT
POI
POI
POI
POI
UTILITY OWNED, RACK MOUNTED METERING CABINET (CELLULAR COMMUNICATIONS)
RECLOSER
UTILITY OWNED/INSTALLED POLE MOUNTED RECLOSER
CUSTOMER
6
5
(3) [redacted] FUSES
CUSTOMER LOCKED 15KV LOADBREAK DISCONNECT SWITCH EQUIPMENT BAY (WITH VISIBLE BREAK)
UTILITY LOCKED 3-PHASE METERING EQUIPMENT BAY
BATTERY STORAGE UNIT
DC /DC CONVERTER
3B
INVERTER
DC
AC
PV ARRAY
1
PV+
PV-
EG
INVERTER STEP-UP XFMR
[redacted] - 13.2KV
[redacted]kVA 2 WINDING DESIGN
[redacted]
4A
A
B
C
[redacted] SWITCH
9
NGR: [redacted]
[redacted]
(3) SURGE ARRESTORS
BATTERY STORAGE UNIT
DC /DC CONVERTER
3B
INVERTER
DC
AC
PV ARRAY
1
PV+
PV-
EG
INVERTER STEP-UP XFMR
[redacted] - 13.2KV
[redacted]kVA 2 WINDING DESIGN
[redacted]
4B
A
B
C
300A SWITCH
9
NGR: [redacted]
(3) SURGE ARRESTORS
[redacted]