LIPA T&D System Losses

STATE of NEW YORK PUBLIC SERVICE COMMISSION

T&D LOSSES TECHNICAL CONFERENCE

JULY 17, 2008

Long Island Power Authority

System Losses are a function of:

- Magnitude of real & reactive power delivery
- Distance between power injection and withdrawal
- LIPA Electric System Characteristics
  - **Fixed Losses -** do not vary according to current. These losses take the form of heat and noise and occur as long as a transformer or a line is energized.
  - **Variable Losses** - vary with the amount of electricity distributed and are proportional to the square of the current.

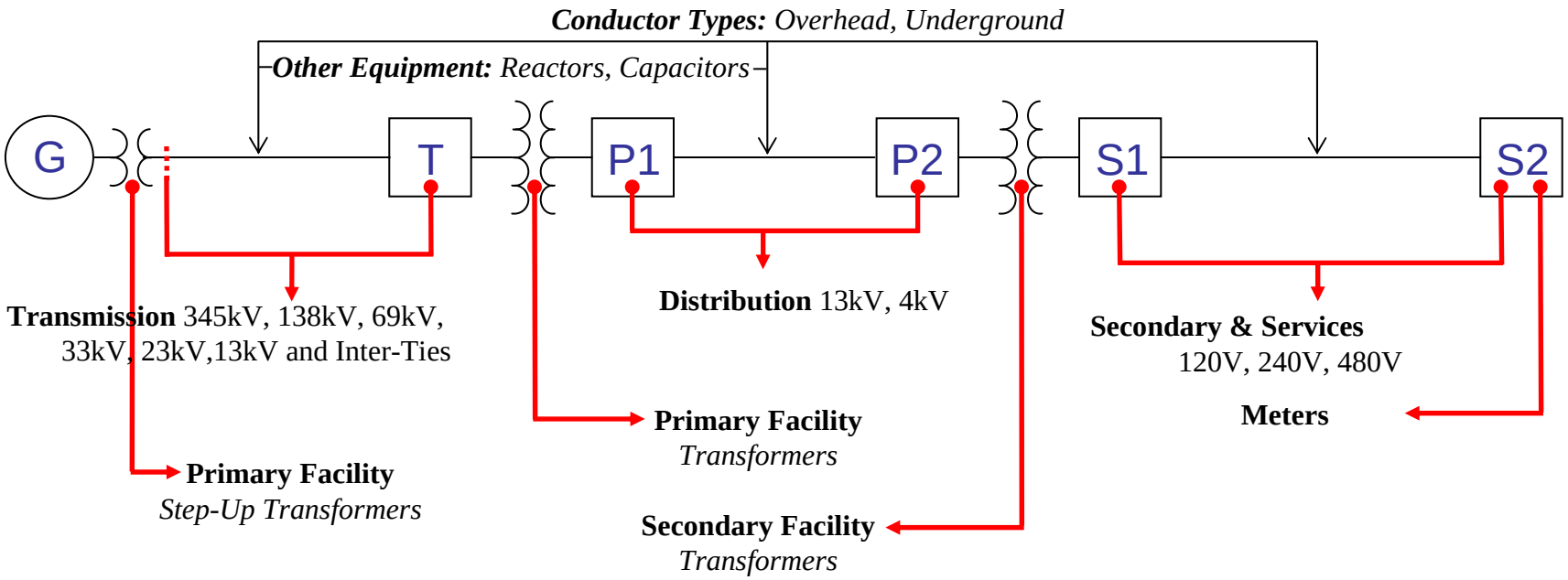

LIPA Actual and Unaccounted T&D system Losses

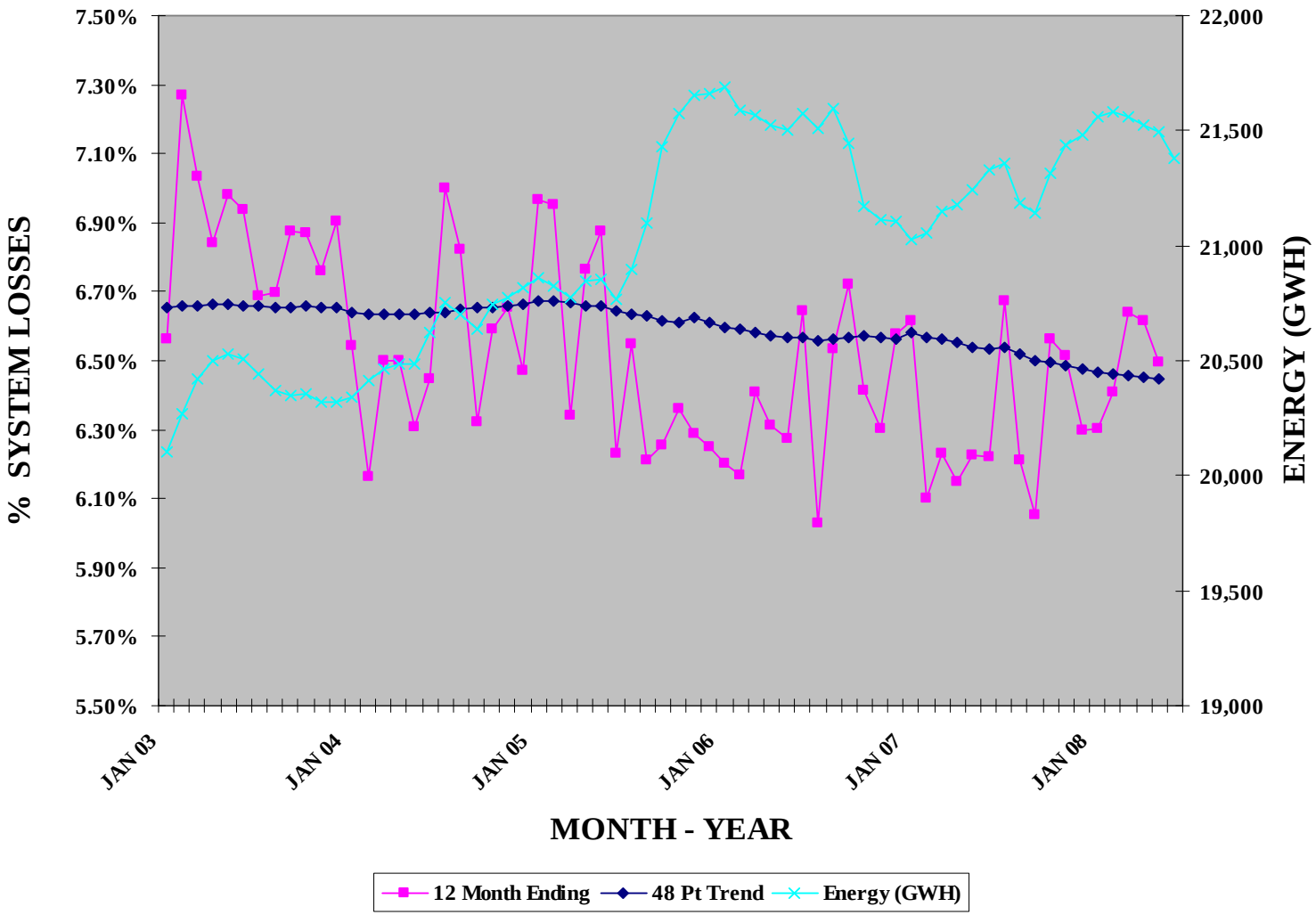

NYISO JUNE 2008 MONTHLY REPORT

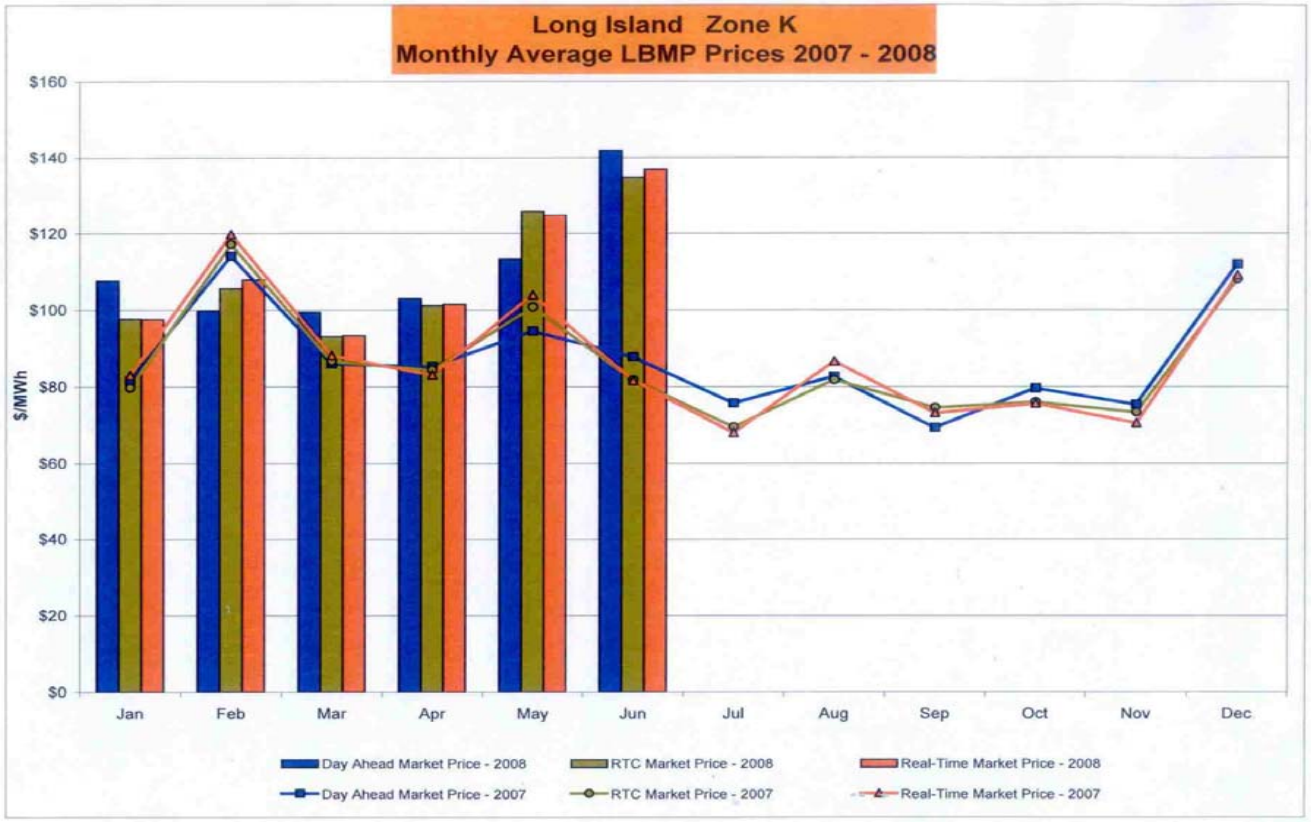

Market Monitoring
Prepared: 7/8/2008 11:00

4-L

Breakdown of LIPA Energy Losses among Electric System Components

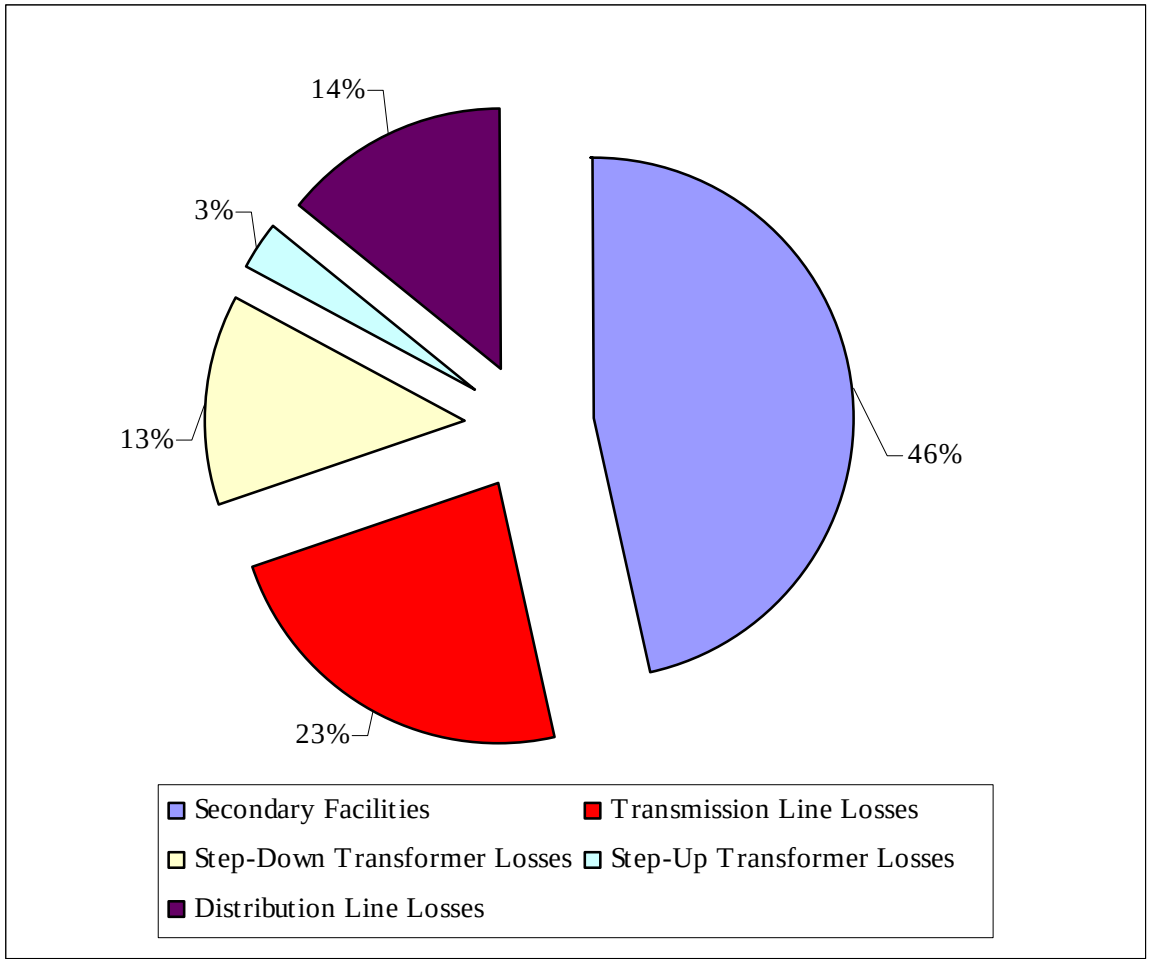

Breakdown of Electric System Components at % of total system Energy Losses

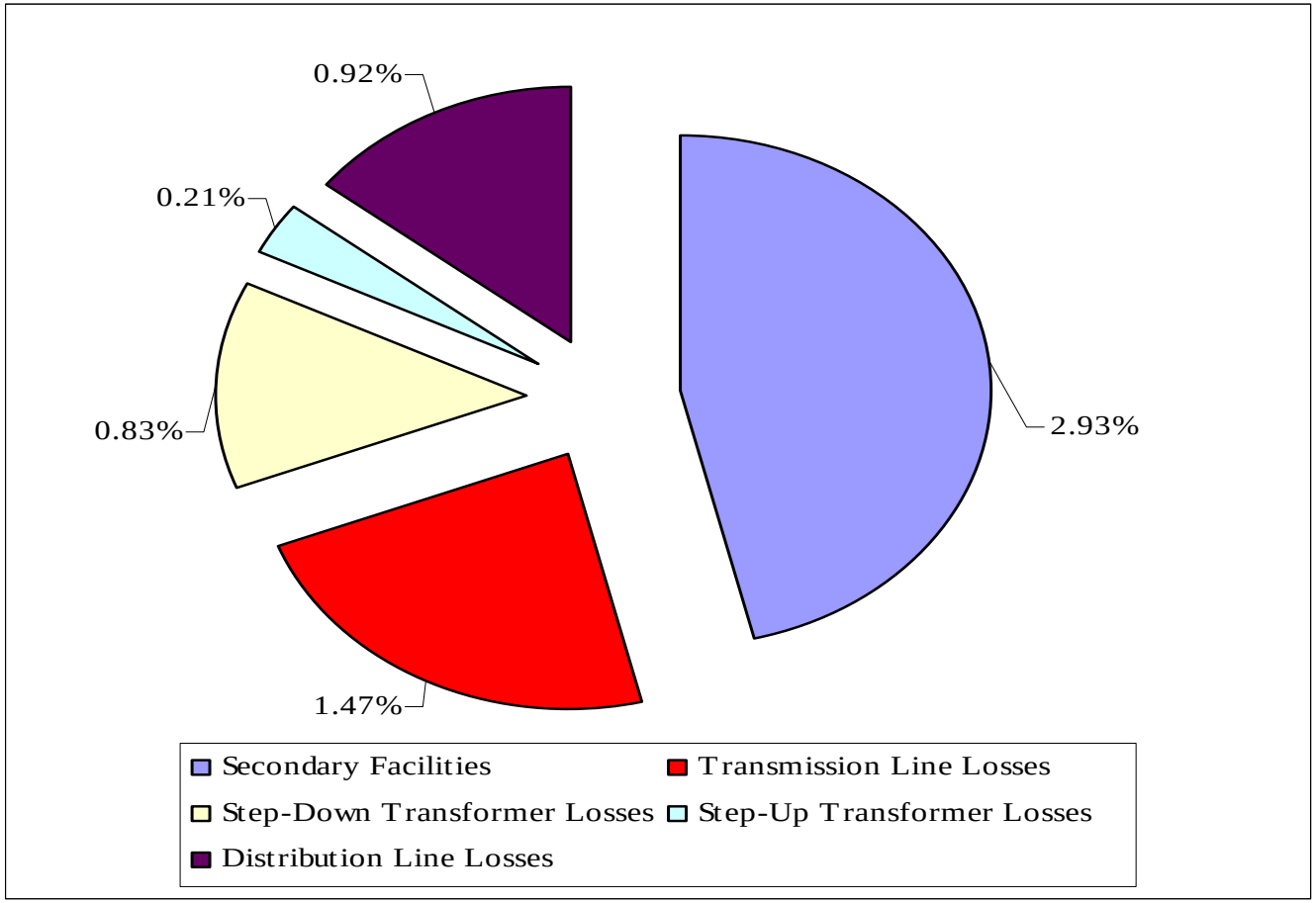

Most recently Adopted Loss Reduction Measures

LIPA established high level goals to reduce losses to improve efficiency of the T&D system. Created a loss reduction Task Force to carry out LIPA's loss reduction strategy.

- ***Transmission Lines***
  - Optimize conductor size for transmission lines.
  - Where applicable, install double circuit lines to minimize losses (ex: Holtsville Gt to Brentwood)
  - Research in new technology Required (ex: Superconductivity)

- ***Distribution Substation and Lines***
  - Aggressive circuits load balancing (balancing A, B & C) < 15% imbalance
  - Reconfigure feeder open points to balance the load on circuits
  - Optimize conductor size where appropriate to minimize the losses (ex: 1/0 AL to 366 AL)
  - Installation of new distribution capacitor banks and additional optimization in dispatch of existing capacitor banks to effectively operate the distribution system power factor closer to unity
  - Establish new guide lines to reduce losses to serve LIPA's customers (ex: Connect more distribution substations to the Bulk Transmission System)

Loss Reductions in Electric System Losses

- ***Secondary Facilities***
  - Ongoing purchase of more efficient 13 kV/Utilization transformers
  - Load balancing on the secondary system

- ***Optimize the Operation of LIPA's T&D System***
  - LIPA modified the reactive reserve criteria from 50% normal weather to 5% extreme weather occurrence. As a result, installation of additional reactive reserve enabled LIPA to operate the T&D system closer to Unity Power Factor.
  - Optimize generation dispatch to reduce system losses